Operational Land Imager 2: Development and Characterization Lessons Learned

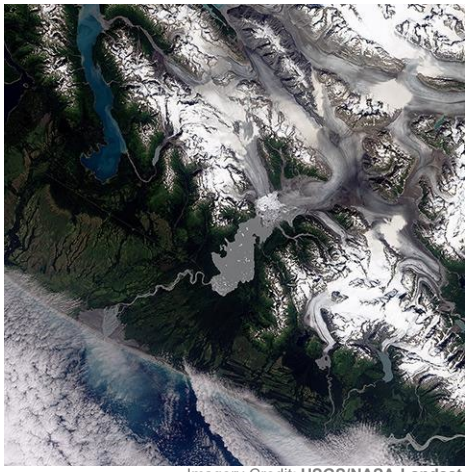

Imagery Credit: **USGS/NASA Landsat**

25 October 2022

Edward Knight Ph.D., Geir Kvaran, Jordan Marks

Ball Aerospace

Abstract

The Operational Land Imager (OLI) on Landsat 8 enabled new and exciting science as a result of its high performance and excellent characterization. The Operational Land Imager 2 (OLI-2) on Landsat 9 has demonstrated excellent performance and strong continuity with OLI. OLI-2 was delivered on schedule and under budget as a result of significant re-use of OLI processes, expertise, and lessons learned. This paper reviews the development and characterization of OLI-2 and identifies features of this approach that could be valuable to future Landsat missions.

Introduction—OLI-2 offered the rare opportunity for a "rebuild"

- The Government directed Landsat 9 to have the same architecture as Landsat 8.
- Only change in performance requirements was to use the full 14 bits generated by the instrument
  - Some characterization/test reqts adjusted
  - Some paperwork cut
- Govt and Ball agreed that "proof of design" tests could be cut or scaled back (decided on case by case basis)
- All workmanship tests preserved
- PDR replaced by an Instrument Heritage Review
  - Covered all elements that changed from OLI

OLI-2 architecture matched OLI

- Pushbroom VIS/SWIR sensor
- Four-mirror telescope with front aperture stop
- FPA consisting of 14 sensor chip assemblies, passively cooled

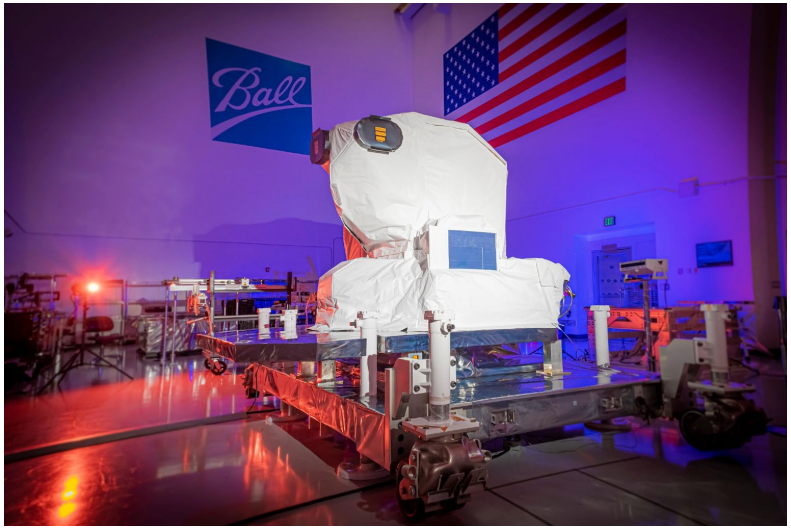

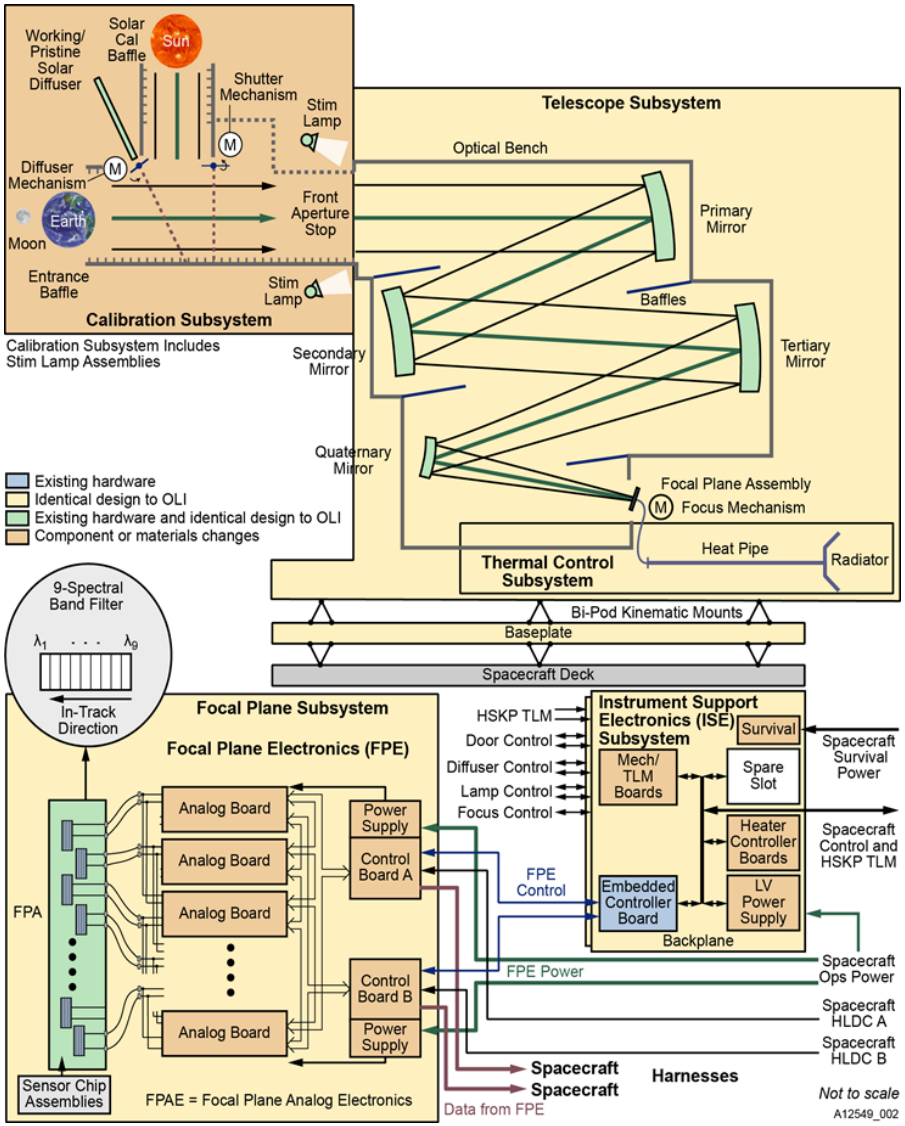

Established Strict Configuration Control for Changes from OLI

Only made changes:

- Driven by requirements changes
  - 92% of all requirements unchanged
  - Major changes: MMOD environment definition, simulator fidelity, several characterization reqts
- Needed to address parts obsolescence
  - Got lucky: only one EEE part was obsolete, and the replacement had the same pinout.
- Where a Ball/NASA review board agreed the benefits substantially outweighed the risk
  - **THIS WAS KEY (Development Lesson #1)**
  - **Prevented "Better is the enemy of good enough errors"**

Added Kevlar blankets in several areas for more MMOD protection

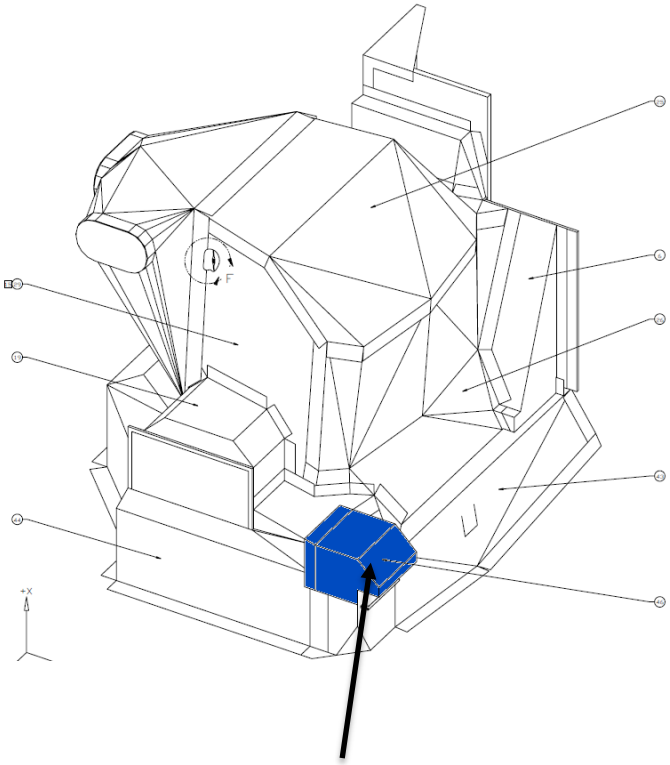

Example: Additional Kevlar Blanket Over S/C Interface Bracket

Re-reviewed all performance and design models

- Held the mindset "maybe we just got lucky last time"
  - And found several areas where we did!
  - **Development Lesson #2**

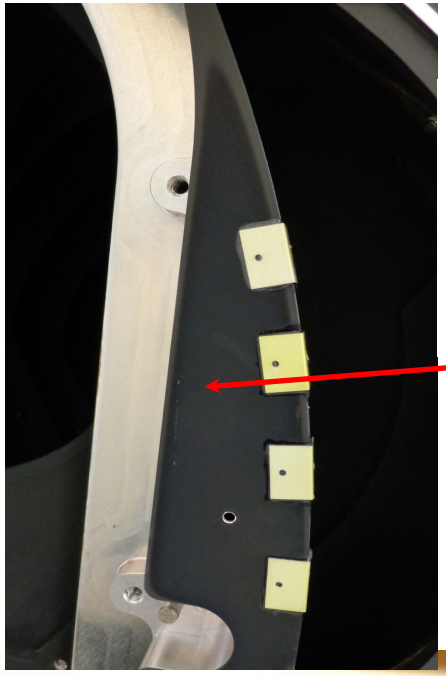

Adhesive in Calibration Wheel should have failed under vibe on OLI; added clips on OLI-2

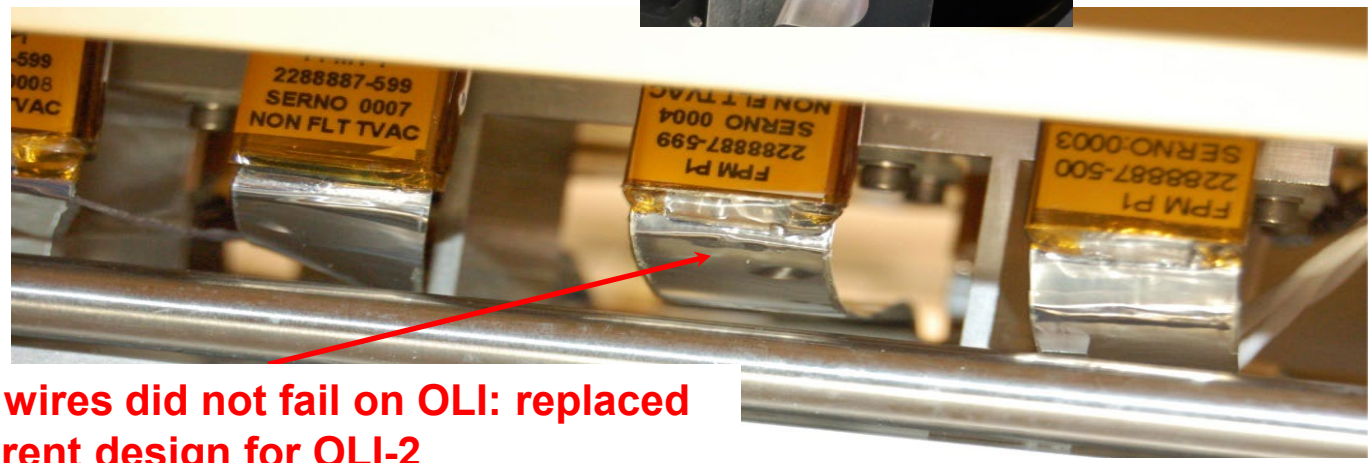

Fatigued wires did not fail on OLI: replaced with different design for OLI-2

OLI-2 Characterization streamlined OLI's efforts (1 of 2)

- Kept all workmanship tests
- Removed design verification tests
  - Notably the instrument level Thermal Balance Test
- Changed to Goddard's GLAMR system for spectral characterization
  - Allowed a complete relative spectral response characterization of every detector without piecemeal analysis or sampling
  - **Characterization Lesson #1: Easier to find outliers and "features" with single complete measurement**
- Kept the same personnel
  - **Characterization Lesson #2**

Having the same analysts evaluate performance and train new analysts meant that "features" of OLI weren't "rediscovered" on OLI-2

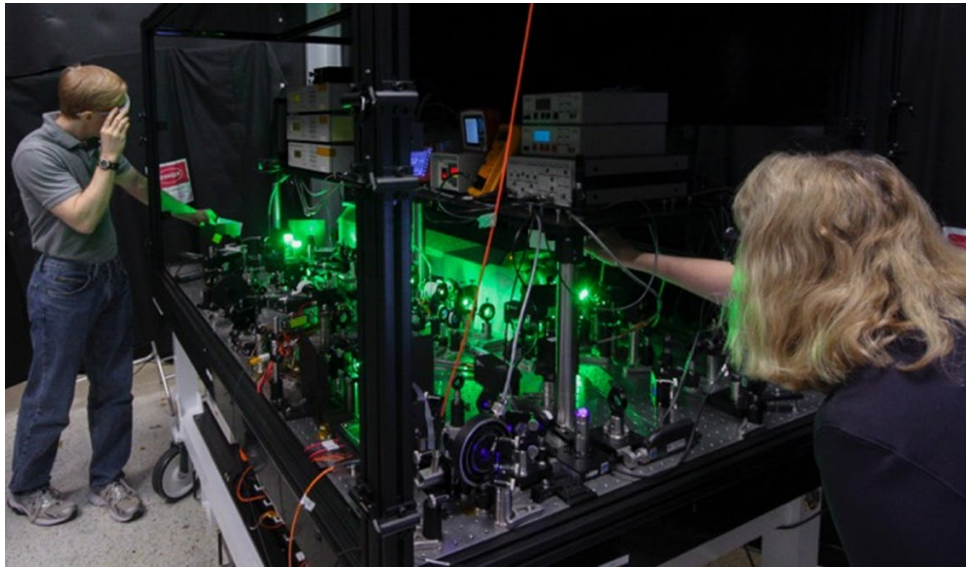

Photo of Goddard's GLMR system courtesy of GSFC

OLI-2 Characterization streamlined OLI's efforts (2 of 2)

- Implemented continuous scan instead of step-stare for spatial characterization
- Upgraded and streamlined the test scripts
  - Substantially improved test time
  - Which was traded for more extensive characterization
  - **Characterization Lesson #3**

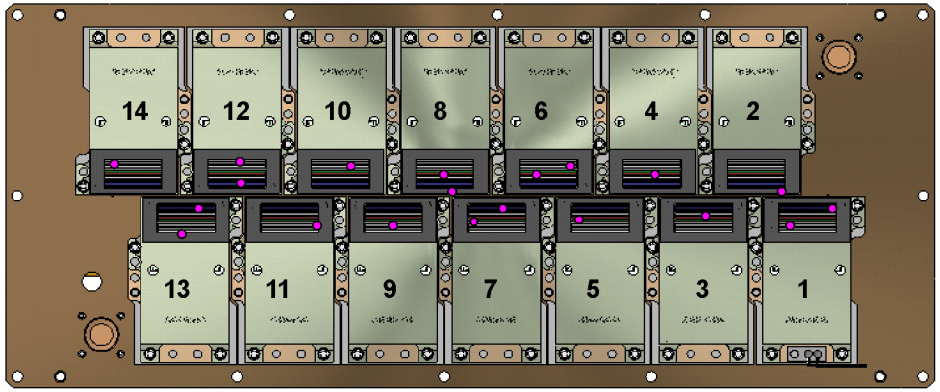

OLI: Had to measure bright target recovery via subsampling (pink dots) with step-stare

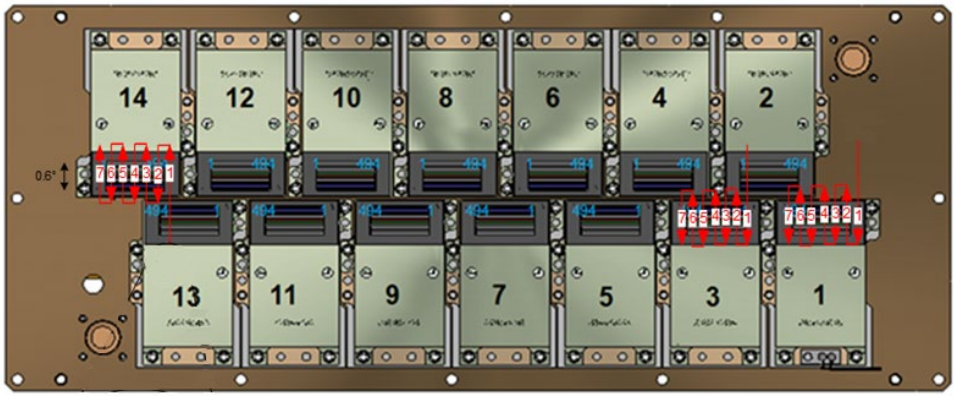

OLI-2: Continuously scanned all 14 modules, covering all detectors (scans for modules 1, 3, 14 shown)

Recommendations for Future Landsat Programs

- Maintain consistency in terminology, requirements definitions, and characterizations
  - E.g., keep “edge response” instead of switching to “MTF”
  - This allows the Government and contractors to better compare performance between future and past Landsat instruments
- Perform full characterizations of all detectors
  - Understanding “features” that still meet specifications may be very valuable to science community
  - GLAMR or equivalent system would be very valuable
- If planning for multiple builds, insist on very strict configuration control coupled with reviews on each build to ensure the first build didn’t just get lucky

Summary

- OLI-2 was developed faster, cheaper, and with better characterization than OLI
- Major cause was keeping 90+% of the design and test program the same
  - And strictly managing the changes
- Future Landsats can benefit by preserving as much continuity as possible